Design Condition:

Water Flow Rate 175 m³/h
Water Inlet Temperature 37 ˚C
Water Outlet Temperature 32 ˚C
Wet Bulb Temperature 29 ˚C

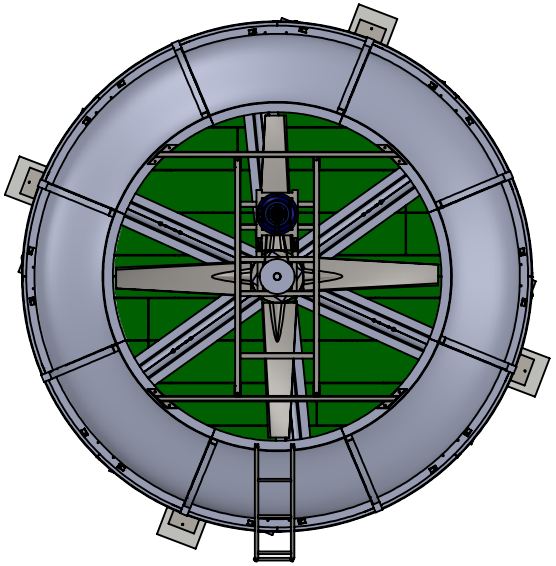

Top View

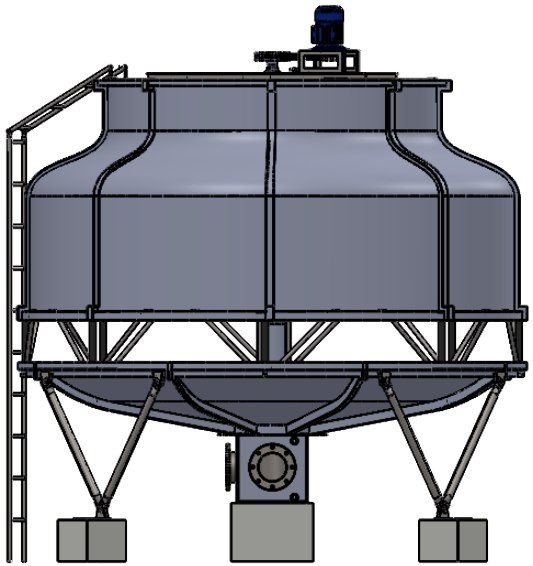

Front View

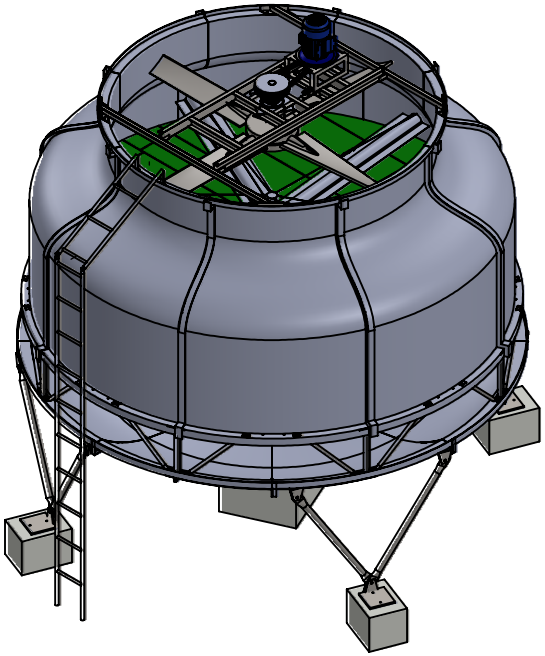

Isometric View

UNLESS OTHERWISE SPECIFIED: DIMENSIONS ARE IN MILLIMETERS SURFACE FINISH: TOLERANCES: LINEAR: ANGULAR:		FINISH:				DEBURR AND BREAK SHARP EDGES
	NAME	SIGNATURE	DATE			
DRAWN	Mahmuda		27/02/18			
CHK'D	Shahed		27/02/18			
APPV'D	Shahed		27/02/18			
MFG						
Q.A				MATERIAL:		
				WEIGHT:		

DO NOT SCALE DRAWING | REVISION

TITLE: Top, Front & Isometric View (ART-250)

Artisan Craft (Bd) Ltd.
We come when Temperature matters
www.artisan-craft.com

DWG NO. DR-C-V-009 | A4

SCALE:1:55 | SHEET 1 OF 1