ITEM NO.	PART NAME	QTY.
1	Casing	8
2	Sump	1
3	Vertical Pipe	1
4	Inlet	1
5	Outlet	1
6	Sprinkler head	1
7	Ladder	1
8	Fan Base	1
9	Drift Eliminator	6
10	Tank connector drain	1
11	Distribution pipe	6
12	Bearing House	1
13	Fan	1
14	Basin	8
15	Foundation	9
16	Motor	1
17	Existing Nut	6
18	Infill	84

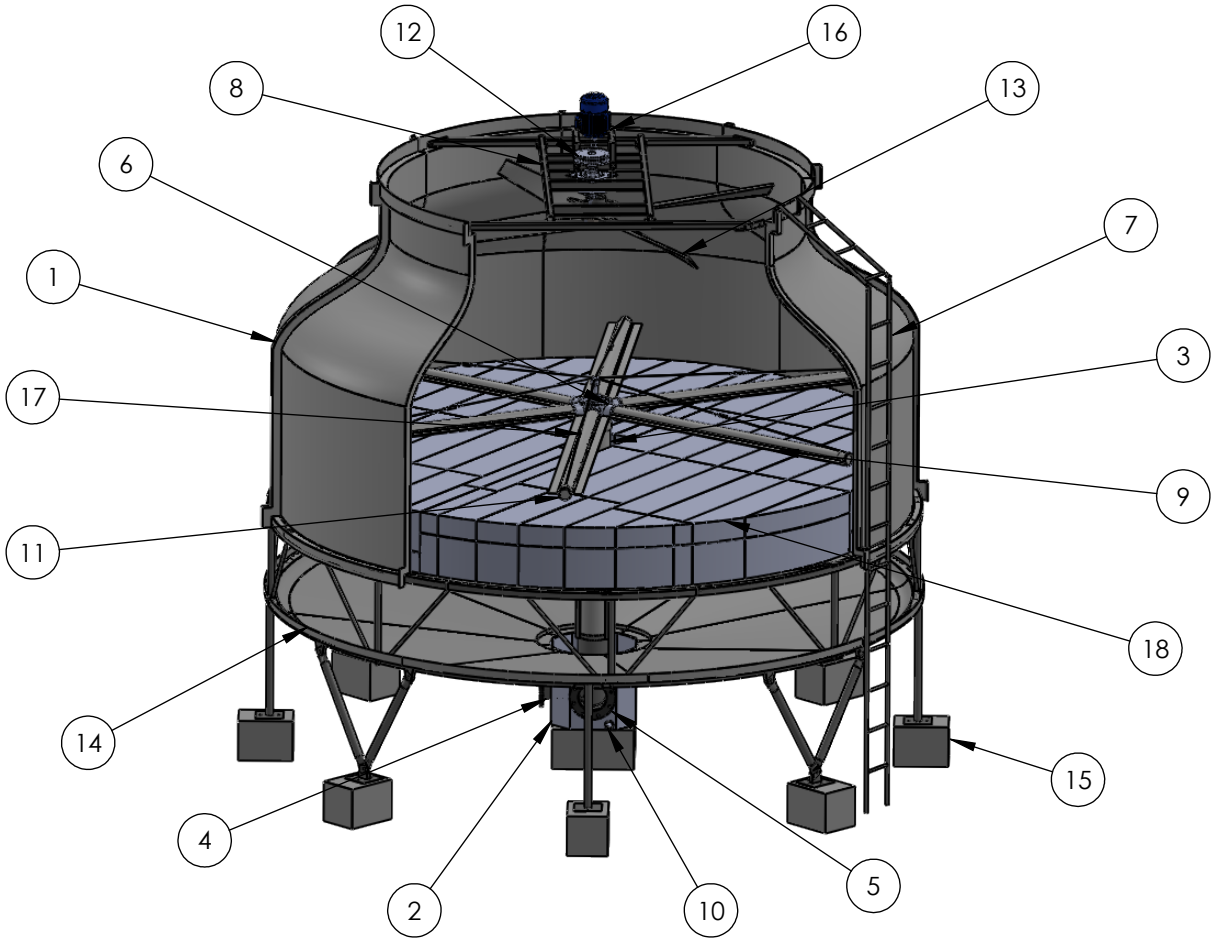

UNLESS OTHERWISE SPECIFIED:
DIMENSIONS ARE IN MILLIMETERS
SURFACE FINISH:
TOLERANCES:
LINEAR:
ANGULAR:

FINISH:

DEBURR AND BREAK SHARP EDGES

DO NOT SCALE DRAWING

REVISION

TITLE: Assembly Drawing (ART-350)

	NAME	SIGNATURE	DATE
DRAWN by	Mahmuda		27/02/18
CHK'D by	Shahed		27/02/18
APPV'D by	Shahed		27/02/18

Artisan Craft (Bd) Ltd.
We come when Temperature matters
www.artisan-craft.com

MATERIAL: FRP, MS, PVC

DWG NO. DR-C-A-011

A4

WEIGHT:

SCALE:1:55

SHEET 1 OF 1